Assembly Instructions:

Product Code : EDMARM
Product Name : Executive Gas Spring Dual Monitor Arm

Time Required:

15 minutes

Tools Required:

Screwdriver, Electric Drill, Pencil, Measuring tape/Ruler
*Tools are not included.

Skill Required:

Easy ●●●○○ Hard

The Assembly Skill Rating is a 5-point system that shows the degree of effort needed in assembling a specific product. With 1 being easy for the average person and 5 requiring an expert.
For most products, two persons are recommended.

NOTE

- As this is a commercial product, some intermediate skills may be required.
- No pre-drill holes or markings are provided on our table or desk tops.
- Please check you have all hardware before assembling.
- If you are missing any hardware, please contact the Apex team. Please ensure you have the name of the item, required hardware part and quantity.
- Please retain your receipt as proof of purchase to validate your warranty.
- Assemble on a clean, flat, smooth surface such as a rug or carpet to avoid parts from being scratched.
- Remove all wrapping materials, including staples and packing straps before you start to assemble
- Keep all hardware parts out of reach of children.

CAUTION

- Heavy product. Do not attempt to lift or move without help
- Do not tighten screws and bolts until completely assembled.
- Do not use this product unless all bolts and screws are firmly secured and tightened.

WARNING

- If parts are missing, broken, damaged or worn stop using the product until all repairs are made.
- Failure to follow these warnings could result in serious injury.

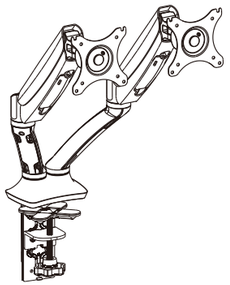

Installation guide

EDMARM

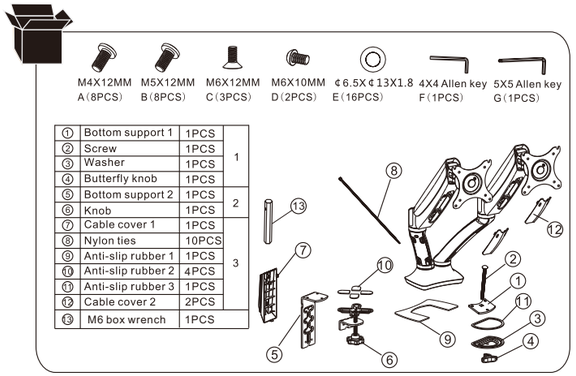

①	Bottom support 1	1PCS	1
②	Screw	1PCS	
③	Washer	1PCS	
④	Butterfly knob	1PCS	
⑤	Bottom support 2	1PCS	2
⑥	Knob	1PCS	
⑦	Cable cover 1	1PCS	3
⑧	Nylon ties	10PCS	
⑨	Anti-slip rubber 1	1PCS	
⑩	Anti-slip rubber 2	4PCS	
⑪	Anti-slip rubber 3	1PCS	
⑫	Cable cover 2	2PCS	
⑬	M6 box wrench	1PCS	

STEP1

Preparations before installing monitor

1.Make sure there are VESA holes 100x100mm or 75x75mm in the monitor.If not, the mount couldn't be installed.

2.Remove the original fixed base of monitor.Be careful not to scratch the screen.

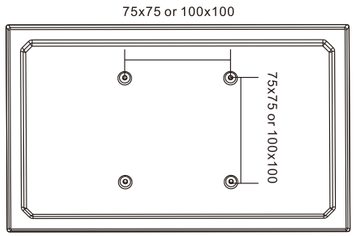

STEP2-A

Option 1:Clamp

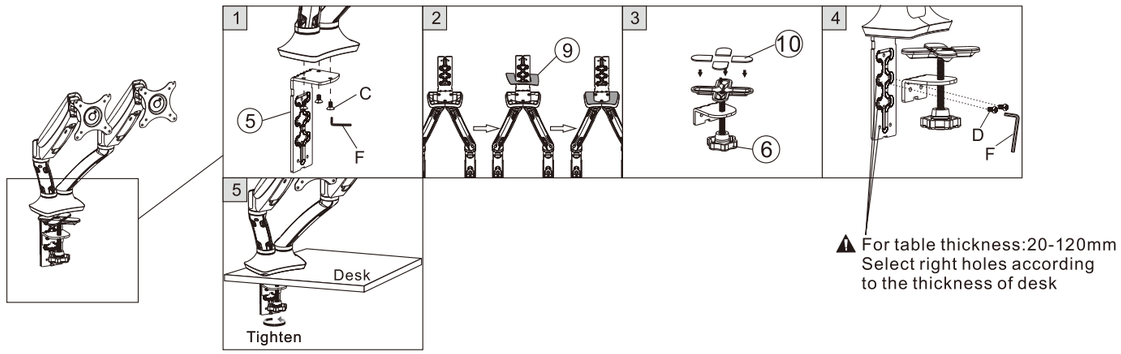

For table thickness:20-120mm
Select right holes according to the thickness of desk

STEP2-B

Option 2:Grommet

For table thickness:25-100mm

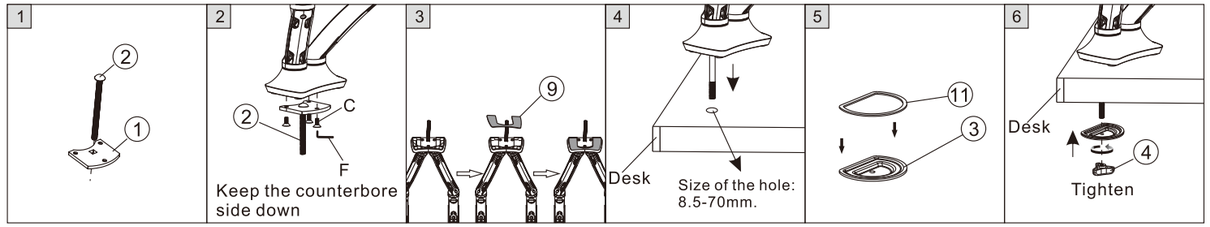

STEP3

Attaching the monitor to the plate

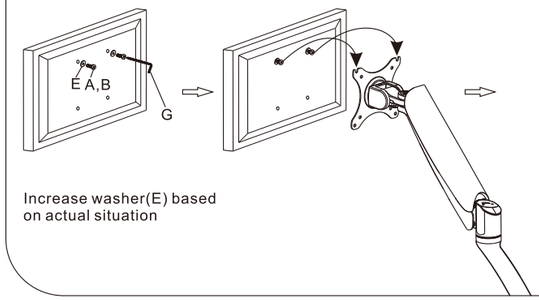

Increase washer(E) based on actual situation

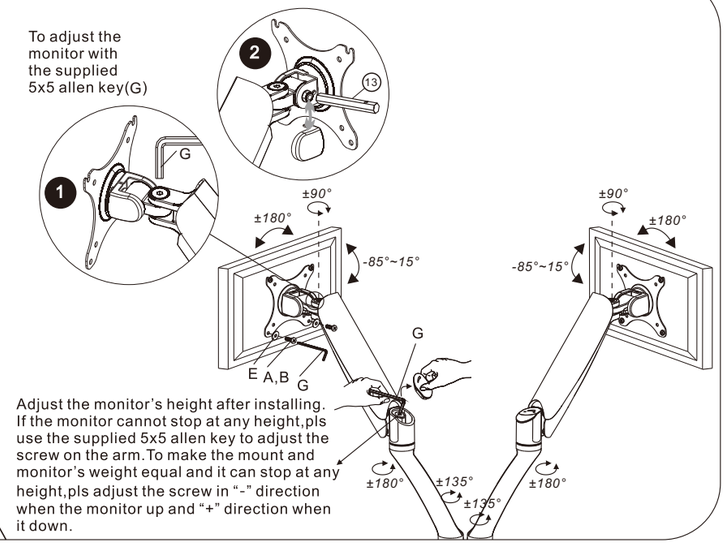

Adjust the monitor's height after installing. If the monitor cannot stop at any height,pls use the supplied 5x5 allen key to adjust the screw on the arm.To make the mount and monitor's weight equal and it can stop at any height,pls adjust the screw in "-" direction when the monitor up and "+" direction when it down.

STEP4

Using cord management

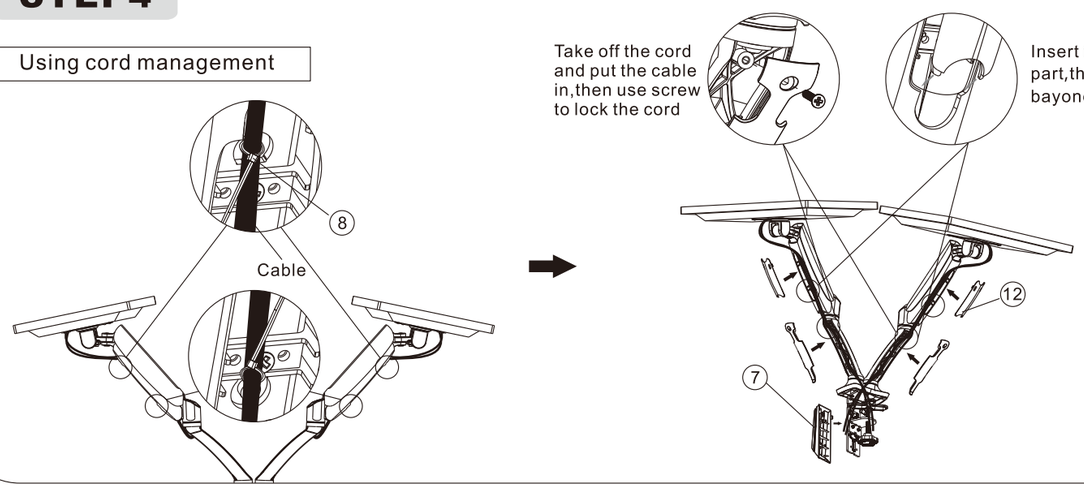

CAUTION

This product contains small items that could be a choking hazard if swallowed.Keep these items away from young children.

- Make Sure these instructions are read and completely understood before attempting installation.If you are unsure of any part of this installation,please contact a professional installer for assistance.
- The desk or mounting surface must be capable of supporting the combined weight of the mount and the display,otherwise the structure must be reinforced.
- please check joint parts every two months,making sure the screws are loosened or not.

This product was designed to be installed on desk.Before installing, make sure the mount will support the combined load of the equipment and hardware.Never exceed the maximum load capacity 9 KG,or else it may result in product failure or personal injury.

Note:this product is intended for indoor use only.Use of this product outdoors could lead to product failure or personal injury.

Warning: This product contains high pressure gas spring parts, please do not put it into fire, high temperature, or disassemble it, which will lead to unexpectable personal injury. The obsolete products can be sent back to the manufacturer or handed over to professional institutions.

To ensure the sealing performance of the gas spring, it is suggested to have complete adjustment to the upper arm (with spring) one time or several times every month.