Assembly Instructions:

Product Code : RMA1 BL
Product Name: Revolve Single Monitor Arm

Time Required:

15 minutes

Tools Required:

Screwdriver, Electric Drill, Pencil, Measuring tape/Ruler
*Tools are not included.

Skill Required:

Easy ●●●○○ Hard

The Assembly Skill Rating is a 5-point system that shows the degree of effort needed in assembling a specific product. With 1 being easy for the average person and 5 requiring an expert. For most products, two persons are recommended.

NOTE

- As this is a commercial product, some intermediate skills may be required.
- No pre-drill holes or markings are provided on our table or desk tops.
- Please check you have all hardware before assembling.
- If you are missing any hardware, please contact the Apex team. Please ensure you have the name of the item, required hardware part and quantity.
- Please retain your receipt as proof of purchase to validate your warranty.
- Assemble on a clean, flat, smooth surface such as a rug or carpet to avoid parts from being scratched.
- Remove all wrapping materials, including staples and packing straps before you start to assemble
- Keep all hardware parts out of reach of children.

CAUTION

- Heavy product. Do not attempt to lift or move without help
- Do not tighten screws and bolts until completely assembled.
- Do not use this product unless all bolts and screws are firmly secured and tightened.

WARNING

- If parts are missing, broken, damaged or worn stop using the product until all repairs are made.
- Failure to follow these warnings could result in serious injury.

rapidline
FURNITURE FOR TODAY

Item No.:RMA1 BL

Installation guide

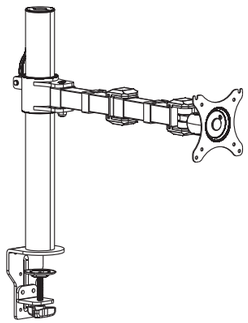

VESA 75×75 100×100 | 17"-30" | max 10kg | -85° ~-15°

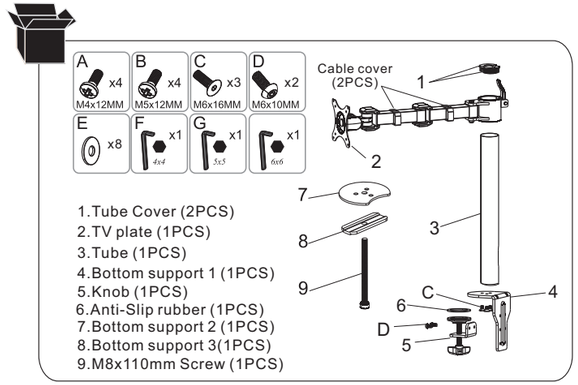

STEP1

Preparations before installing monitor

1.Make sure there are VESA holes 100x100mm or 75x75mm in the monitor.If not, the mount couldn't be installed.

2.Remove the original fixed base of monitor.Be careful not to scratch the screen.

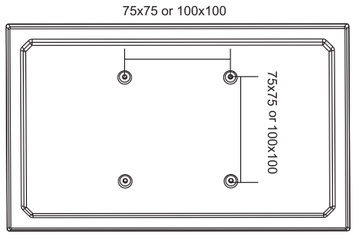

STEP2-A

OPTION 1:Clamp

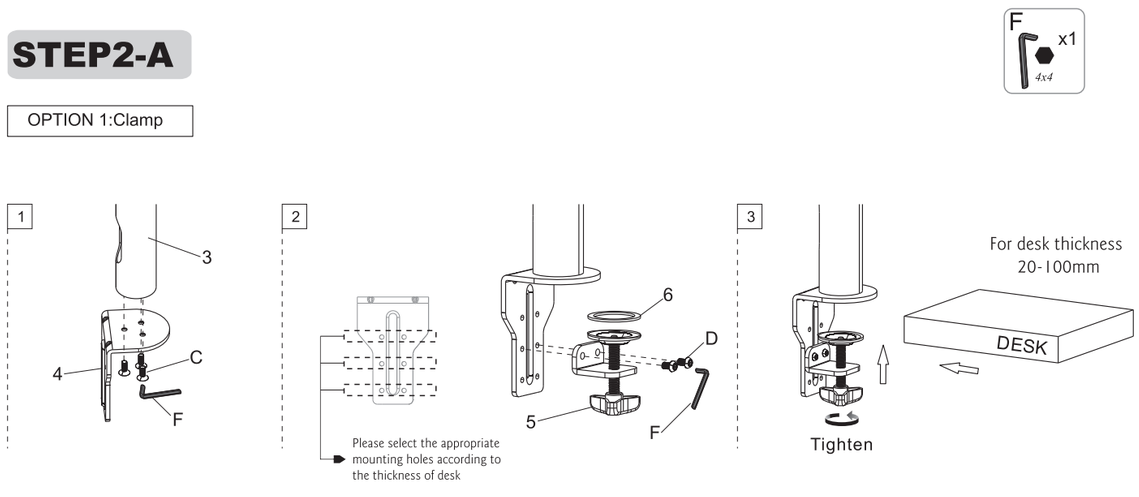

STEP2-B

OPTION 1:Grommet

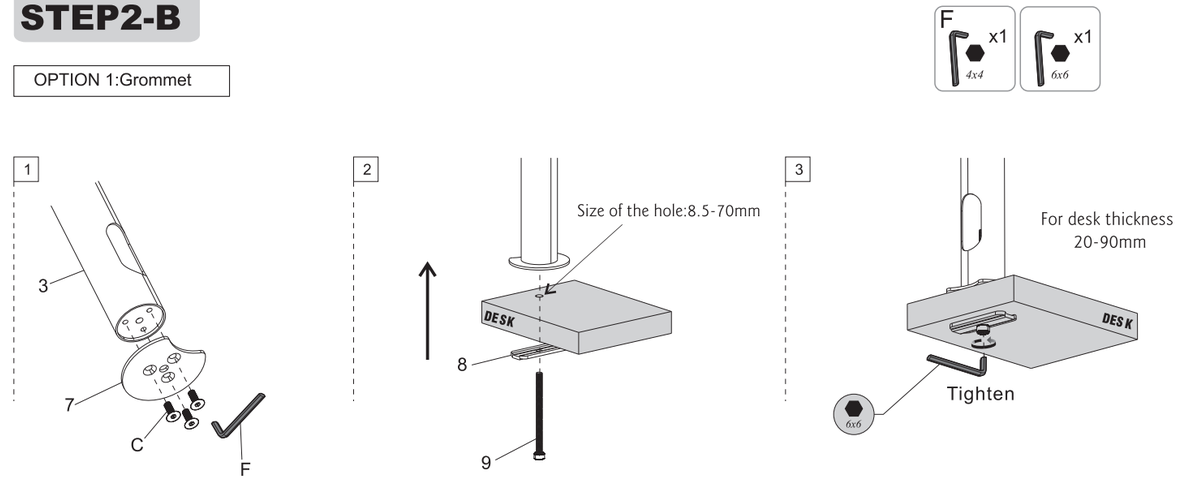

STEP3

Install TV plate

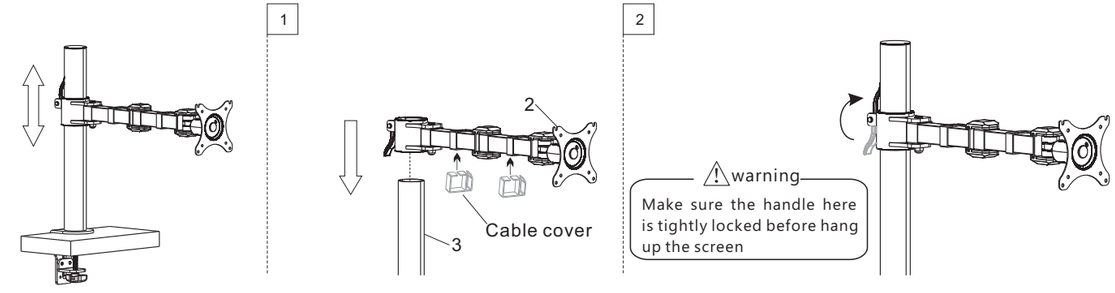

STEP4

Attaching screen to TV plate

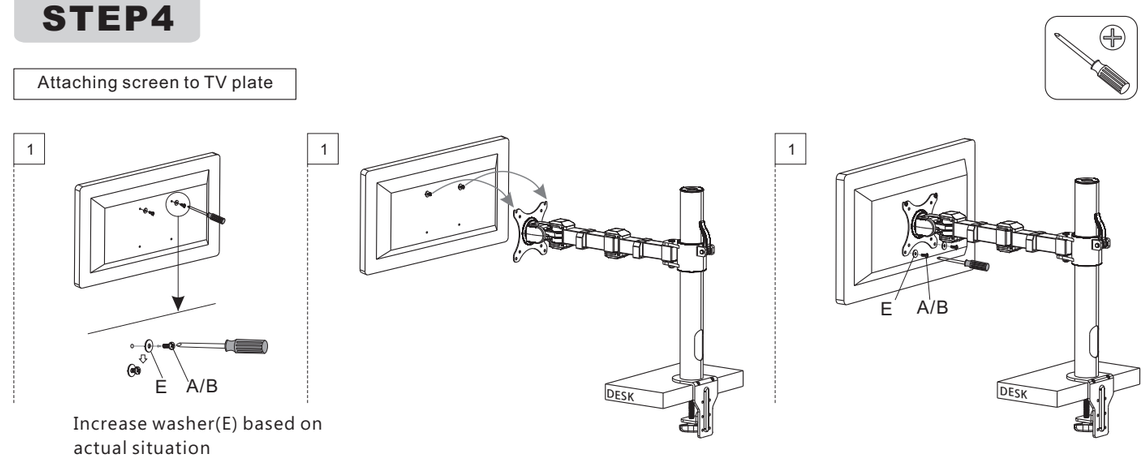

Increase washer(E) based on actual situation

STEP5

Adjusting screen

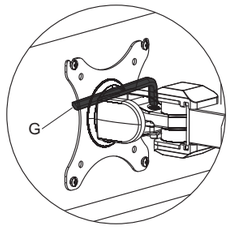

To adjust the monitor with
the supplied 5x5 allen key(G)

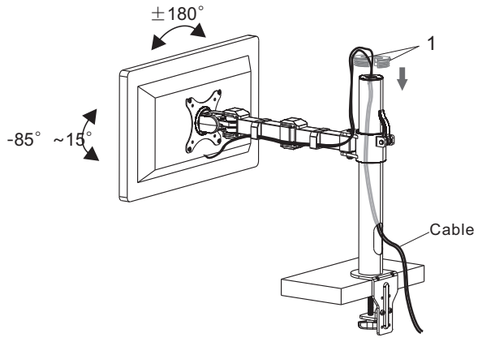

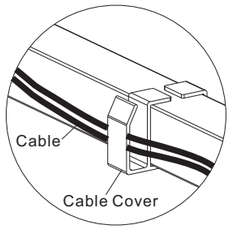

CAUTION

This product contains small items that could be a choking hazard if swallowed.Keep these items away from young children.

- Make Sure these instructions are read and completely understood before attempting installation.If you are unsure of any part of this installation,please contact a professional installer for assistance.
- The desk or mounting surface must be capable of supporting the combined weight of the mount and the display,otherwise the structure must be reinforced.
- please check joint parts every two months,making sure the screws are loosened or not.

This product was designed to be installed on desk.Before installing, make sure the mount will support the combined load of the equipment and hardware.Never exceed the maximum load capacity 10 KG,or else it may result in product failure or personal injury.

Note:this product is intended for indoor use only.Use of this product outdoors could lead to product failure or personal injury.