Assembly Instructions:

Product Code : CH12 / CH15 / CH18
Product Name: Rapid Span, Worker and Vibe Hutch

Time Required:

30 minutes

Tools Required:

Screwdriver, Electric Drill, Pencil, Measuring tape/Ruler
*Tools are not included.

Skill Required:

Easy ●●●●○ Hard

The Assembly Skill Rating is a 5-point system that shows the degree of effort needed in assembling a specific product. With 1 being easy for the average person and 5 requiring an expert.
For most products, two persons are recommended.

NOTE

- As this is a commercial product, some intermediate skills may be required.
- No pre-drill holes or markings are provided on our table or desk tops.
- Please check you have all hardware before assembling.
- If you are missing any hardware, please contact the Apex team. Please ensure you have the name of the item, required hardware part and quantity.
- Please retain your receipt as proof of purchase to validate your warranty.
- Assemble on a clean, flat, smooth surface such as a rug or carpet to avoid parts from being scratched.
- Remove all wrapping materials, including staples and packing straps before you start to assemble
- Keep all hardware parts out of reach of children.

CAUTION

- Heavy product. Do not attempt to lift or move without help
- Do not tighten screws and bolts until completely assembled.
- Do not use this product unless all bolts and screws are firmly secured and tightened.

WARNING

- If parts are missing, broken, damaged or worn stop using the product until all repairs are made.
- Failure to follow these warnings could result in serious injury.

Assembly Instructions

OE 105WH/DG NV
BOOKCASE HUTCH

DOC. NO : RD-F05-AT
REV. NO : A
REV. DATE : 25.08.2006

Thanks you for purchasing this quality product. Be sure to lay all components on a soft and clean surface before assembly in order to avoid components from being scratched.

REV. :A **DATE : 27-07-2015**

CAUTIONS :

1. **Check contents against list for quantity.**
2. **Familiarize yourself with the components and hardware by reviewing the Assembly Instructions.**
3. **Do not over tightened the screws and bolts as it may damage the threads.**
4. **Keep all hardware parts out of the reach of children.**

A	B	C	D	E	F	G
Minifix Bolt And Casing 14 Pcs	Kix Cam 14 Pcs	Housing Cap (Short) 14 Pcs	Allen-Key 1 Pc	Shelf Support Pin 16 Pcs	TZ Connector 4 Pcs	Screw M4 x 32mm 4 Pcs

STEP 1

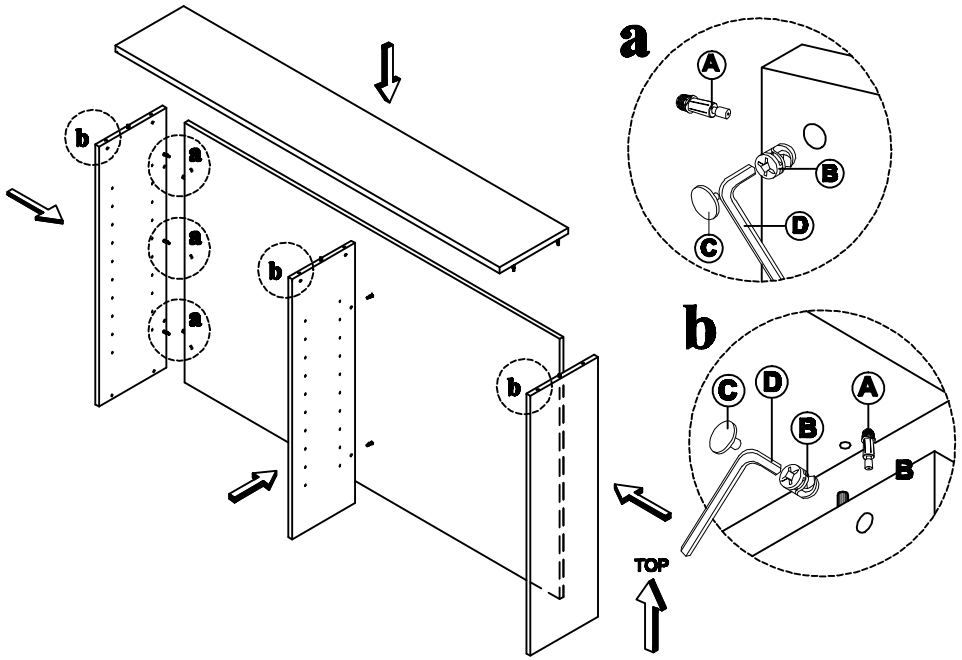

"Please make sure the bolt head is properly pulled / inserted into centre of housing zinc, ensuring that connections are positively secured and tight"
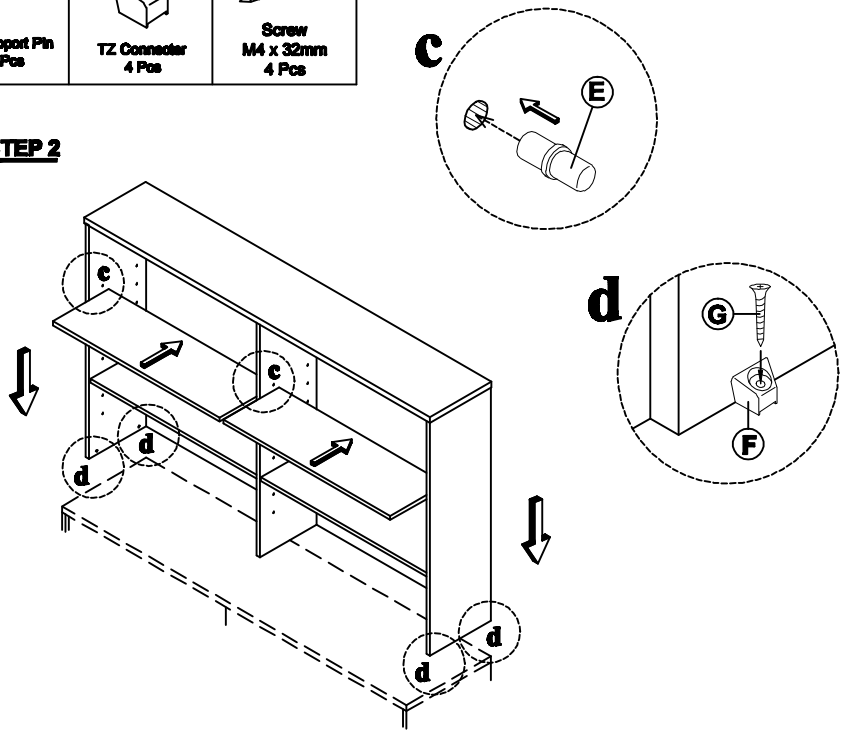
STEP 2