Assembly Instructions:

Product Code : HARTLEY TASK
Product Name: Hartley Task Chair

APEX
COMMERCIAL FURNITURE

Time Required:

15 minutes

Tools Required:

Screwdriver, Electric Drill, Pencil, Measuring tape/Ruler
*Tools are not included.

Skill Required:

Easy ●●●○○ Hard

The Assembly Skill Rating is a 5-point system that shows the degree of effort needed in assembling a specific product. With 1 being easy for the average person and 5 requiring an expert. For most products, two persons are recommended.

NOTE
- As this is a commercial product, some intermediate skills may be required.
- No pre-drill holes or markings are provided on our table or desk tops.
- Please check you have all hardware before assembling.
- If you are missing any hardware, please contact the Apex team. Please ensure you have the name of the item, required hardware part and quantity.
- Please retain your receipt as proof of purchase to validate your warranty.
- Assemble on a clean, flat, smooth surface such as a rug or carpet to avoid parts from being scratched.
- Remove all wrapping materials, including staples and packing straps before you start to assemble
- Keep all hardware parts out of reach of children.

CAUTION
- Heavy product. Do not attempt to lift or move without help
- Do not tighten screws and bolts until completely assembled.
- Do not use this product unless all bolts and screws are firmly secured and tightened.

WARNING
- If parts are missing, broken, damaged or worn stop using the product until all repairs are made.
- Failure to follow these warnings could result in serious injury.

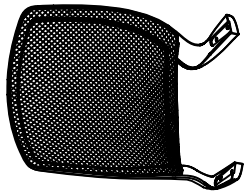

A 1PCS

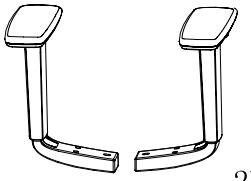

G 2PCS

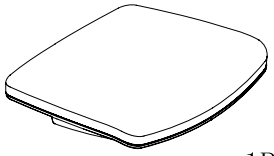

B 1PCS

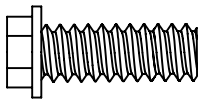

H 5/16″*1-1/4″ 4PCS

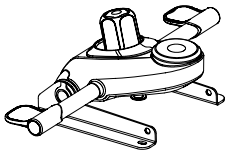

C 1PCS

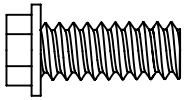

I 5/16″*1″ 4PCS

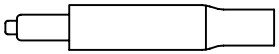

D 1PCS

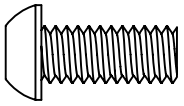

J 5/16″*1″ 6PCS

E 1PCS

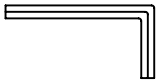

K 1PCS

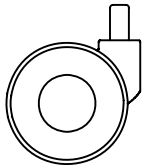

F 5PCS

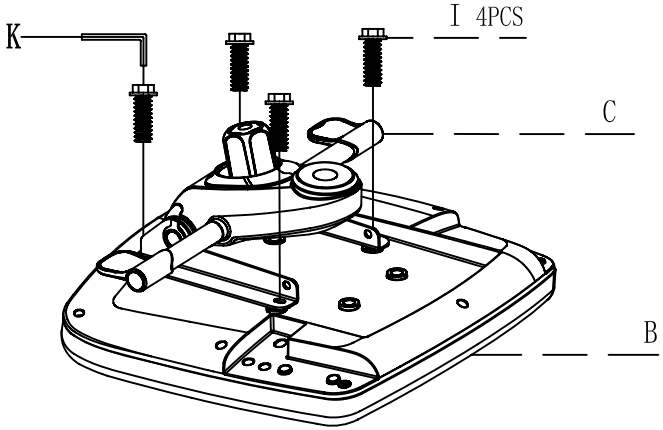

①

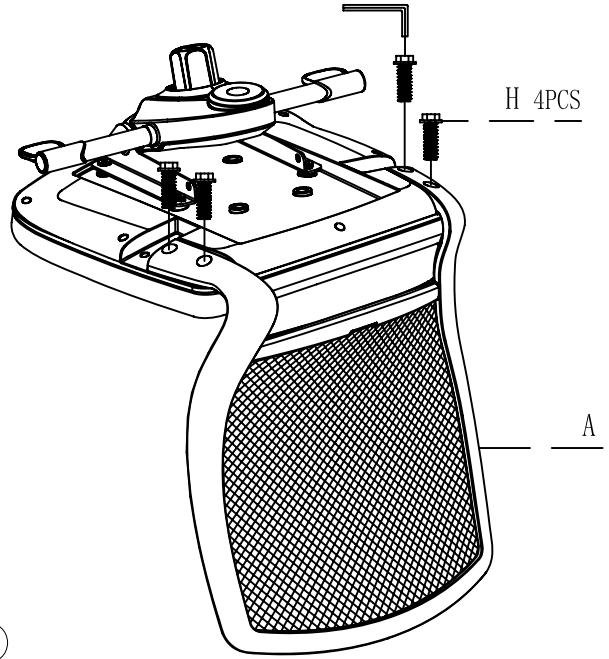

②

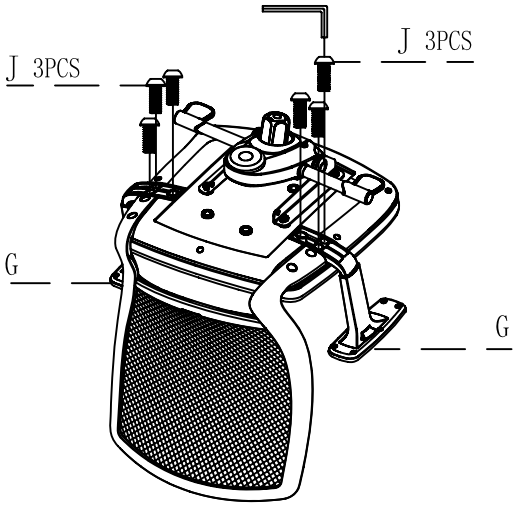

③

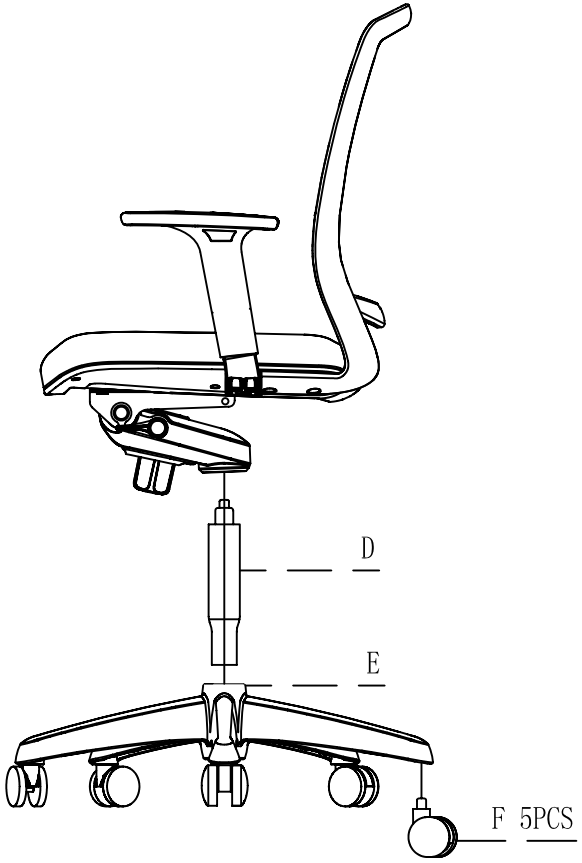

④

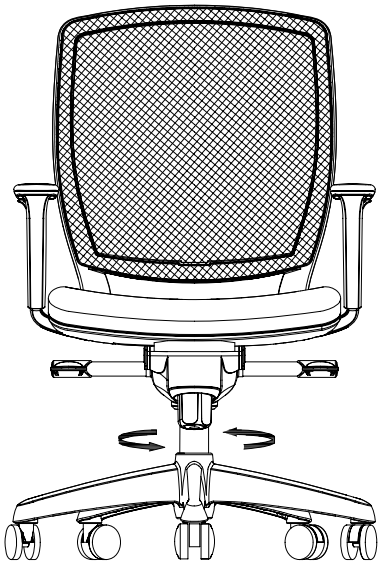

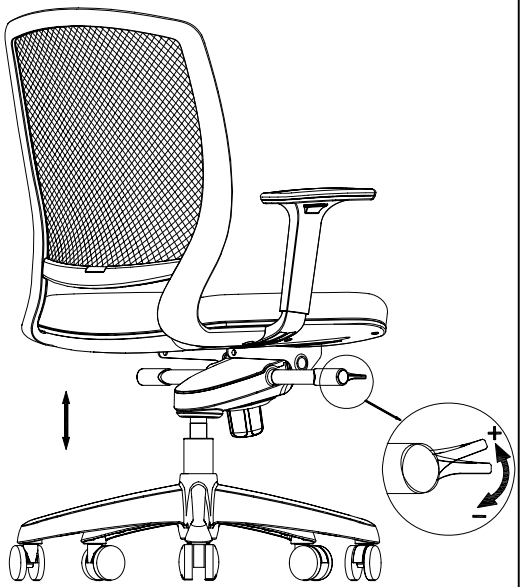

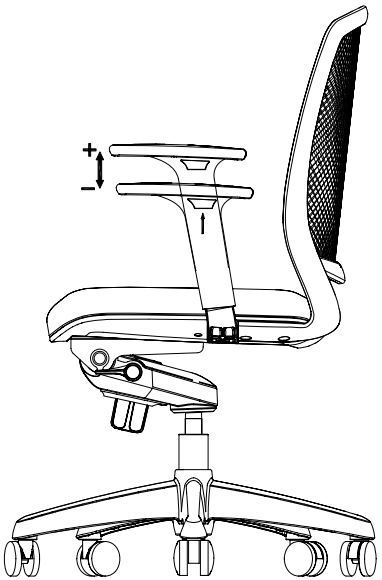

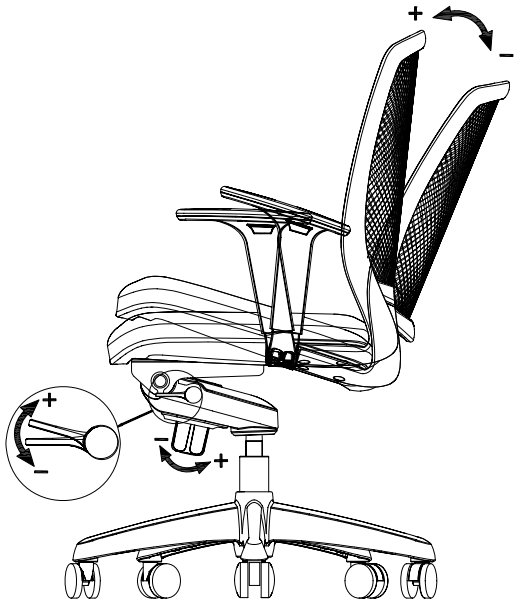

HARTLEY TASK CHAIR