Assembly Instructions:

Product Code : RTB9 & RTB12 - Table Base / CBT9 & CBT12 - Table
Product Name: Disc Base Table

Time Required:

20 minutes

Tools Required:

Screwdriver, Electric Drill, Pencil, Measuring tape/Ruler
*Tools are not included.

Skill Required:

Easy ●●●○○ Hard

The Assembly Skill Rating is a 5-point system that shows the degree of effort needed in assembling a specific product. With 1 being easy for the average person and 5 requiring an expert.
For most products, two persons are recommended.

Please note, as this is a commercial product, some intermediate skills are required.
*No pre-drill holes or markings are provided on tops.

NOTE

- As this is a commercial product, some intermediate skills may be required.
- No pre-drill holes or markings are provided on our table or desk tops.
- Please check you have all hardware before assembling.
- If you are missing any hardware, please contact the Apex team. Please ensure you have the name of the item, required hardware part and quantity.
- Please retain your receipt as proof of purchase to validate your warranty.
- Assemble on a clean, flat, smooth surface such as a rug or carpet to avoid parts from being scratched.
- Remove all wrapping materials, including staples and packing straps before you start to assemble
- Keep all hardware parts out of reach of children.

CAUTION

- Heavy product. Do not attempt to lift or move without help
- Do not tighten screws and bolts until completely assembled.
- Do not use this product unless all bolts and screws are firmly secured and tightened.

WARNING

- If parts are missing, broken, damaged or worn stop using the product until all repairs are made.
- Failure to follow these warnings could result in serious injury.

	A 1
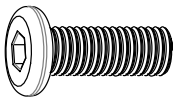	B
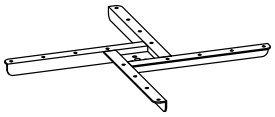	C 1
	D 1
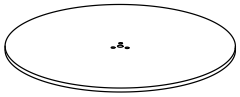	E 1
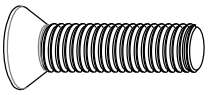	F 3

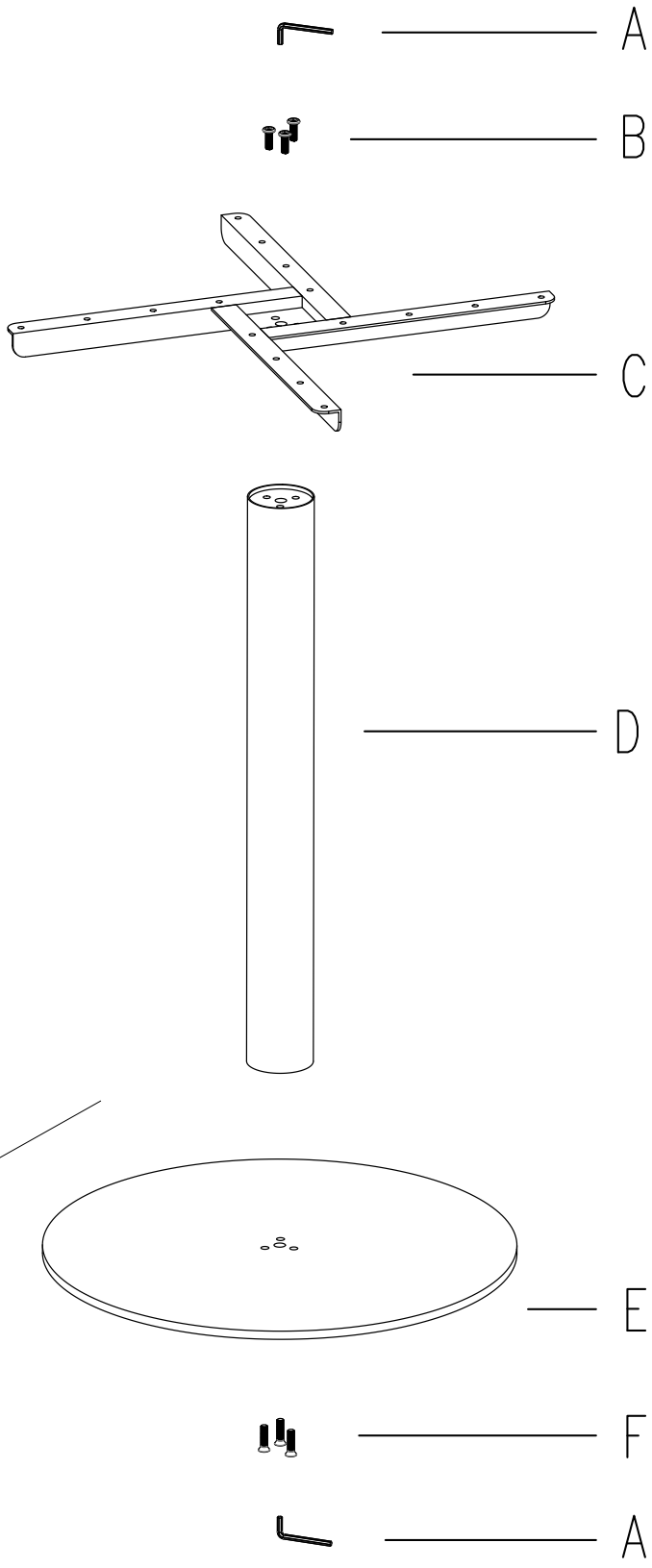

Step 1.
Build your frame

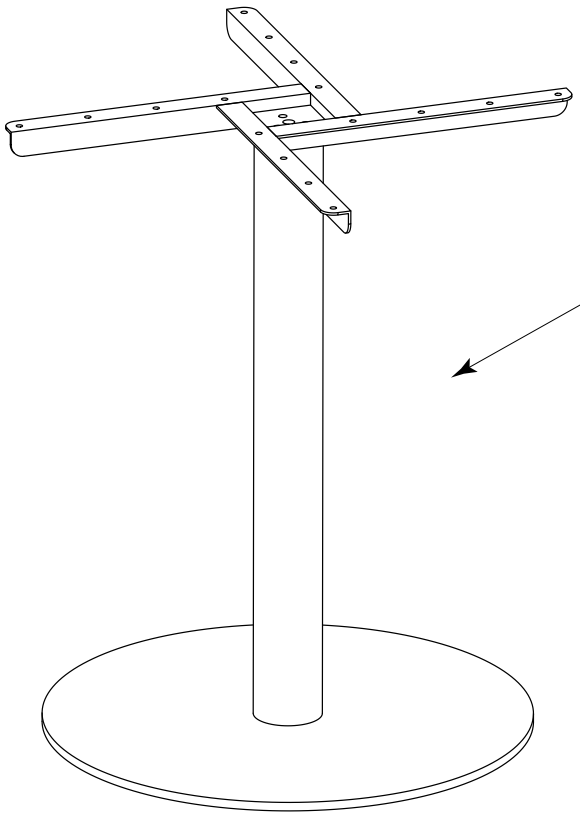

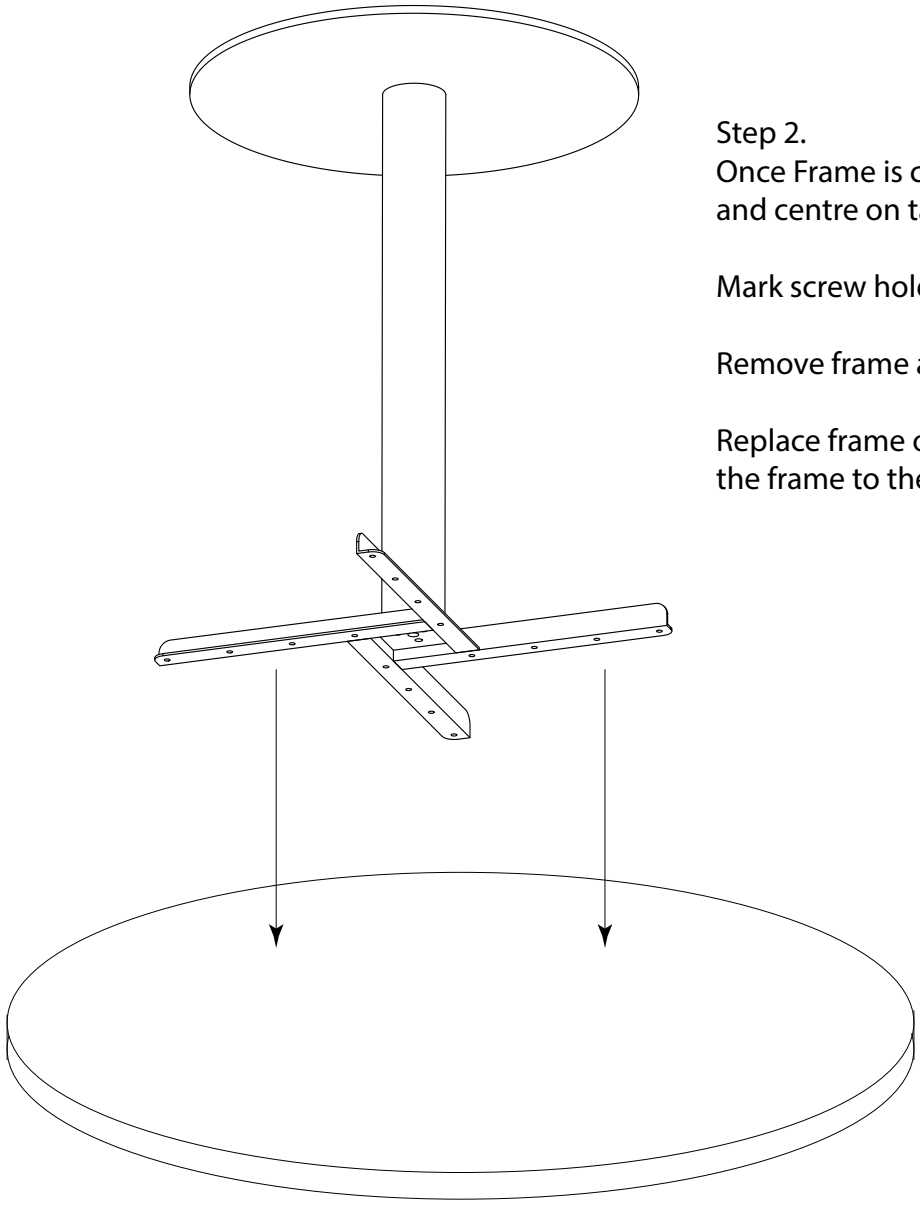

Step 2.
Once Frame is complete, flip upside down and centre on table top

Mark screw holes on table with pencil

Remove frame and pre-drill your screw holes

Replace frame onto top, upside down and screw the frame to the top.

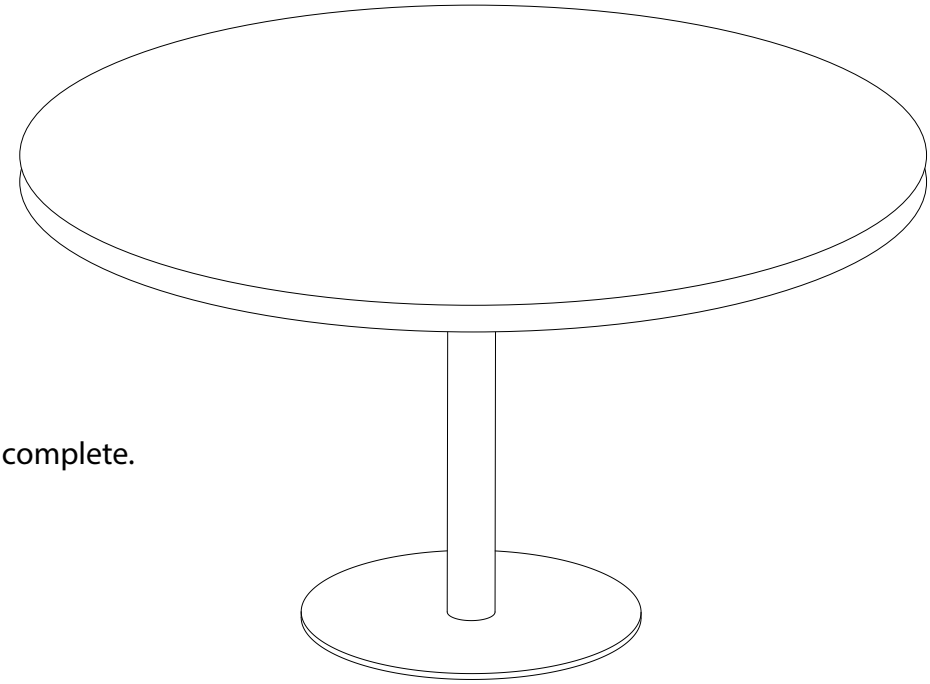

Step 3.
Flip right side up and your table is complete.